LITEMAX
Sunlight Readable LCD!

ENRICH YOUR VISUAL WORLD…

LITEMAX

DLD1900-T

19” LED B/L LCD

User Manual

Approved by	Checked by	Prepared by

LITEMAX Electronics Inc.
8F, No.137, Lane 235, Bau-chiau Rd.,
Shin-dian Dist., New Taipei City, Taiwan
R.O.C.
Tel : 886-2-8919-1858
Fax: 886-2-8919-1300
Homepage: http://www.litemax.com

Record of Revision

Version and Date	Page	Old Description	New Description	Remark
Jun/2/2026	all		Initial release	

Contents

Record of Revision **2**
Contents **3**
1 General Description **4**
1.1 Key Features 4
1.2 General Specifications 4
1.3 Absolute Maximum Ratings 5
2 Electrical Specifications **6**
2.1 Electrical Characteristics 6
2.2 Recommended Power ON/OFF Sequence 6
2.3 Timing Characteristics 7
2.4 LVDS Signal Timing Characteristics 9
2.5 LVDS Data Mapping 10
2.6 Input/ Output Terminals 11
3 Optical Specification **12**
4 LED Driving Board Electrical Characteristics **14**
4.1 LED Driving Board Operating Characteristics 14
4.2 LED Driving Board Connector Pin Assignment 15
4.3 LED Driving Board Mechanical Characteristics 16
5 Mechanical Drawing **17**
6 AD68862HP Board & OSD Functions **20**
6.1 OSD Function 26
6.2 OSD Menu 27
7 Precautions **33**
7.1 Handling and Mounting Precautions 33
7.2 Storage Precautions 33
7.3 Operation Precautions 34
8 Disclaimer **34**

1 General Description

The DLD1900-T is a 19 inch industrial grade LCD, with brightness 2000 nits, it produces sharp images, crisp text and lifelike colors. The Durapixel LED backlight technology ensures high reliability and low power consumption, suitable for indoor application, kiosk, factory automation, military, transportation and gaming application.

1.1 Key Features

- Brightness 2000nits
- Sunlight readable
- Resolutions: 1280x1024
- Wide Viewing Angle of 176°(H), 176°(V)
- LED Backlight
- Wide temperature (-20˚C ~ 70 ˚C)
- Low power consumption
- BL MTBF: 100,000 hours

1.2 General Specifications

Model Name	DLD1900-T
Description	19” TFT LCD, LED Backlight 2000 nits, 1280x1024
Screen Size	19”
Display Area (mm)	376.32(H) x 301.056(V)
Brightness	2000 cd/m^2
Resolution	1280x1024
Aspect Ratio	5:4
Contrast Ratio	1400:1
Pixel Pitch (mm)	0.294(H) x 0.294(V)
Pixel Per Inch (PPI)	86
Viewing Angle	176°(H),176°(V)
Color Saturation (NTSC)	83%
Display Colors	16.7M
Response Time (Typical)	25ms
Panel Interface	LVDS
Input Interface	HDMI, DP
Input Power	DC12V
Power Consumption	40W
OSD Key	4 Keys (Power Switch, Menu, +, -)
OSD Control	Brightness, Color, Contrast, Auto Tuning, H/V Position…etc
Dimensions (mm)	396(W) x 326.01(H) x 36(D)
Bezel Size(U/B/L/R)	12.48/12.48/9.84/9.84mm
Mounting	75x75,100x100mm
Weight (Net)	2.5kg
Operating Temperature	-20 ˚C ~ 70 ˚C
Storage Temperature	-30 ˚C ~ 80 ˚C

DLD= Panel + LED Driving Board + AD Control Board + Chassis

1.3 Absolute Maximum Ratings

Absolute Electrical Ratings

The followings are maximum values which, if exceeded, may cause damage to the unit.

Item	Symbol	MIN	MAX	Unit	Remark
Power Voltage	VCCS	-0.3	5.5	V	
Operating Temperature	Top	-20	70	℃	
Storage Temperature	Tst	-30	80	℃	
Relative Humidity Note2	RH	--	≤95	%	Ta≤40℃
		--	≤85	%	40℃＜Ta≤50℃
		--	≤55	%	50℃＜Ta≤60℃
Absolute Humidity	AH	--	≤70	g/m³	Ta＞60℃

Note1: Ta means the ambient temperature. It is necessary to limit the relative humidity to the specified temperature range. Condensation on the module is not allowed.

Note2: The absolute maximum rating values of this product are not allowed to be exceeded at any times. A module should be used with any of the absolute maximum ratings exceeded, the characteristics of the module may not be recovered, or in an extreme condition, the module may be permanently destroyed

2 Electrical Specifications

2.1 Electrical Characteristics

DC Characteristics for Panel Driving

Item		Symbol	MIN	TYP	MAX	Unit	Remark
Supply Voltage		VCC	4.5	5	5.5	V	Include ripple
Input Signal Voltage	Low Level	VIL	0	--	0.3×VCC	V	
	High Level	VIH	0.7×VCC	--	VCC	V	
VDD Current	60Hz	IVCC	--	330	--	mA	White pattern
Power Consumption	60Hz	PVCC	--	1650	1980	mW	
Inrush current		Irush	--	--	1.5	A	Note2

Note1: Indicated the subsequent version may be updated.
Note2: To test the current dissipation, using the "white pattern" shown

VCC rising time is 470μs

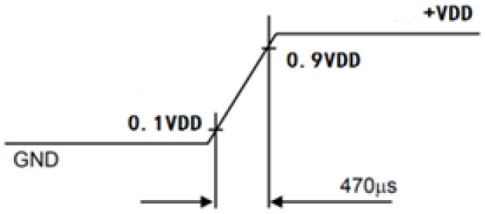

2.2 Recommended Power ON/OFF Sequence

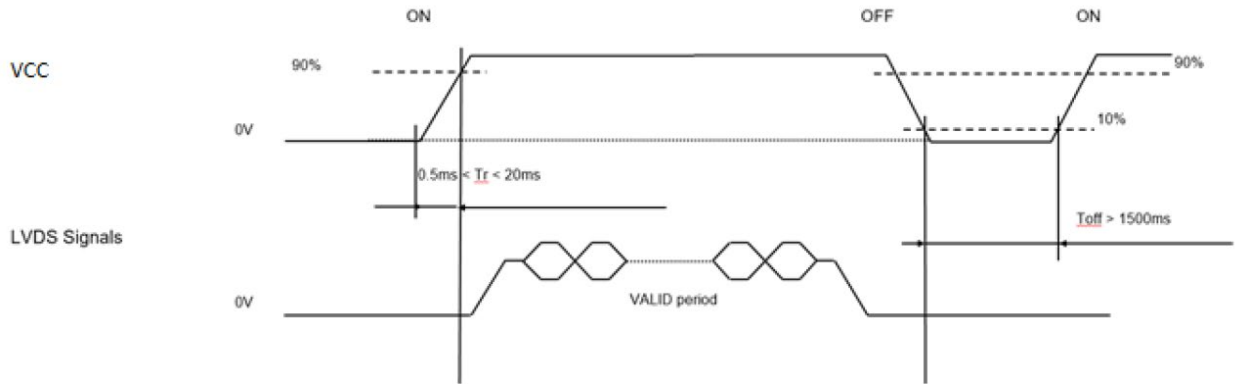

Note1: The low level of these signals and analog powers are GND level.
Note2: All of the power and signals should be kept at GND level before power on. If there are residual voltages on them, the LCD might not work properly.
Note3: Keep Enable low level until the display has stabilized.
Note4: If some of display and function signals of this product are cut while this product is working, even if the signal input to it once again, it might not work normally. If a customer stops the display and function signals, VCC also must be shut down.

2.3 Timing Characteristics

LVDS DC Electrical Characteristics

Parameter	Symbol	Condition	Min.	Typ.	Max.	Unit
Differential input high threshold voltage	R_{xVTH}	R_{xVCM} =1.2 V	+100	-	-	mV
Differential input low threshold voltage	R_{xVTL}		-	-	-100	mV
Input voltage range (singled-end)	R_{xVIN}		0	-	2.4	V
Fail safe				0.3		V
Differential input voltage	$\|V_{ID}\|$		100	-	600	mV
Input common mode voltage	R_{xVCM}	V_{DD} = 3.3V	1.0	1.2	2.4 -$\|V_{ID}\|$/2	V
Differential input voltage	$\|V_{ID}\|$		100	-	600	mV
Differential input leakage current	RV_{xLIK}		-10	-	+10	uA
Internal terminate resistor	R_{int}		80	100	120	Ω

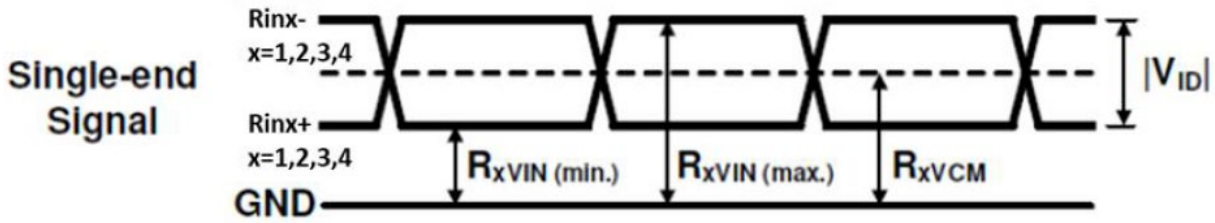

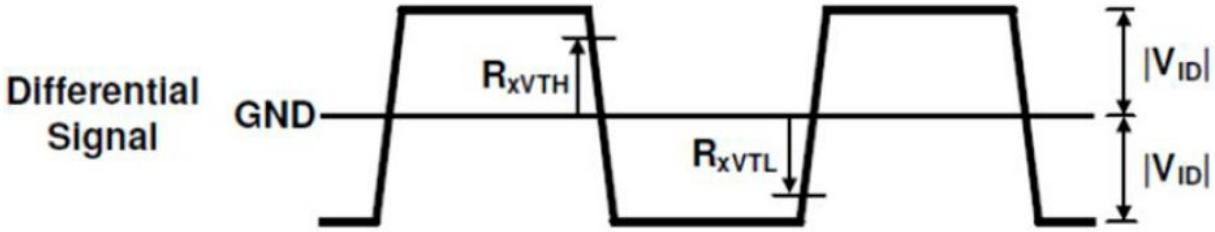

LVDS AC Electrical Characteristics

Parameter	Symbol	Condition	Min.	Typ.	Max.	Unit
Clock frequency	R_{xFCLK}			50.4		MHz
Input data Position0	tRIP1		-|tRMG|	0.0	|tRMG|	ns
Input data Position1	tRIP0		T/7-|tRMG|	T/7	T/7+|tRMG|	ns
Input data Position2	tRIP6		2T/7-|tRMG|	2T/7	2T/7+|tRMG|	ns
Input data Position3	tRIP5		3T/7-|tRMG|	3T/7	3T/7+|tRMG|	ns
Input data Position4	tRIP4		4T/7-|tRMG|	4T/7	4T/7+|tRMG|	ns
Input data Position5	tRIP3		5T/7-|tRMG|	5T/7	5T/7+|tRMG|	ns
Input data Position6	tRIP2		6T/7-|tRMG|	6T/7	6T/7+|tRMG|	ns
Input data skew margin	T_{RSKM}	R_{xCLK} = 85MHz □ $R_{xVTH} - R_{xVTL}$ =200 mV	-450	-	+450	ps
Input spread spectrum ratio	SS_R		-	-	+/-3	%
Input modulation frequency	F_M		-	-	200k	Hz

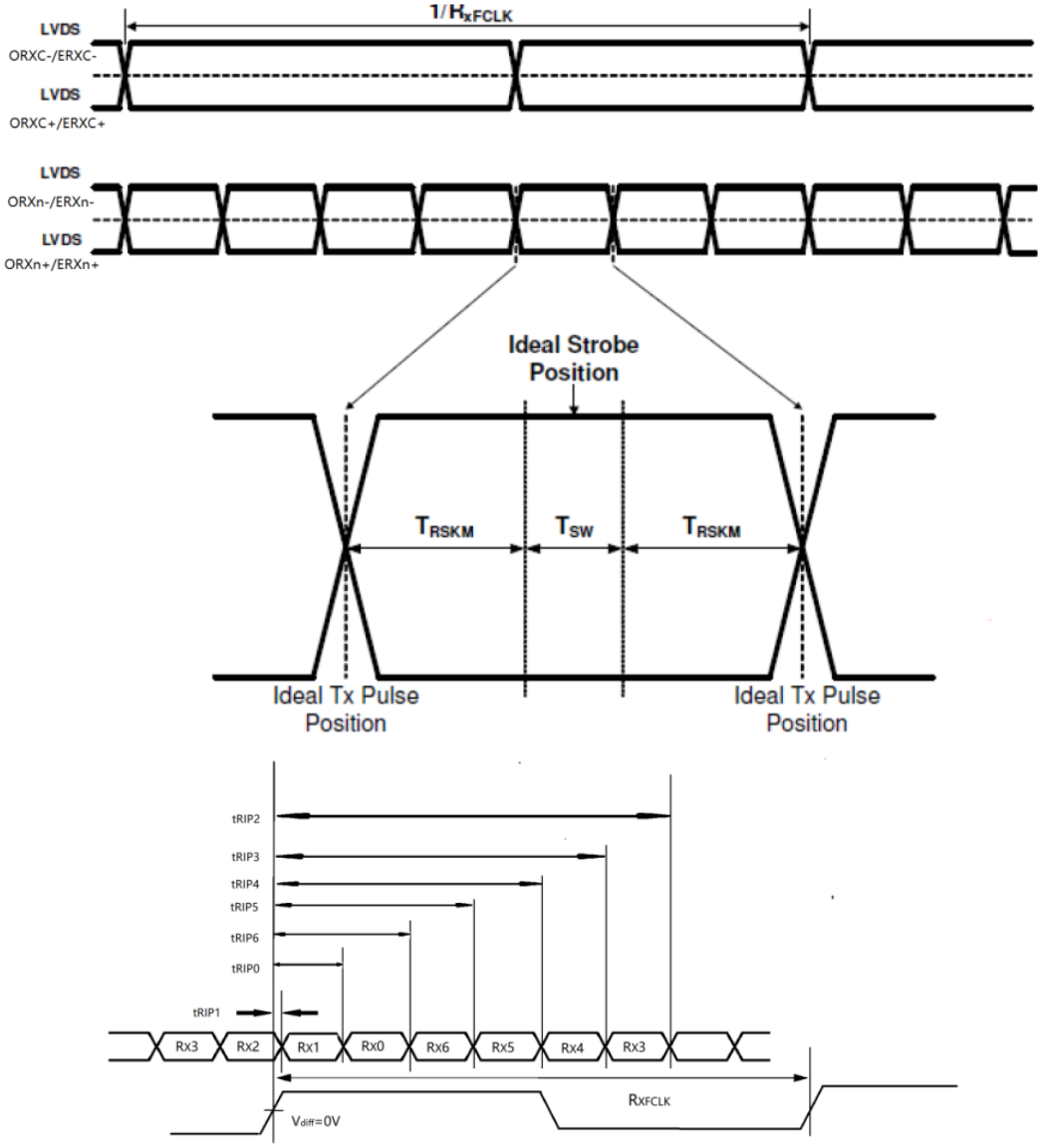

Note 1: Tsw: Strobe width (LVDS IP internal data sampling window)

2.4 LVDS Signal Timing Characteristics

Parameter		Symbol	Min.	Typ.	Max.	Unit	Remark
DCLK frequency		Fclk	43.84	50.4	64.62	MHz	Tclk=1/Fclk
Horizontal section	Horizontal total	Th	700	750	880	Tclk	
	Horizontal blanking	Thb	60	110	240	Tclk	
	Valid Data Width	Thd		640		Tclk	
Vertical section	Vertical total	Tv	1044	1120	1224	TH	
	Vertical blanking	Tvb	20	96	200	TH	
	Valid Data Width	Tvd		1024		TH	
Frame Rate		FR		60		Hz	

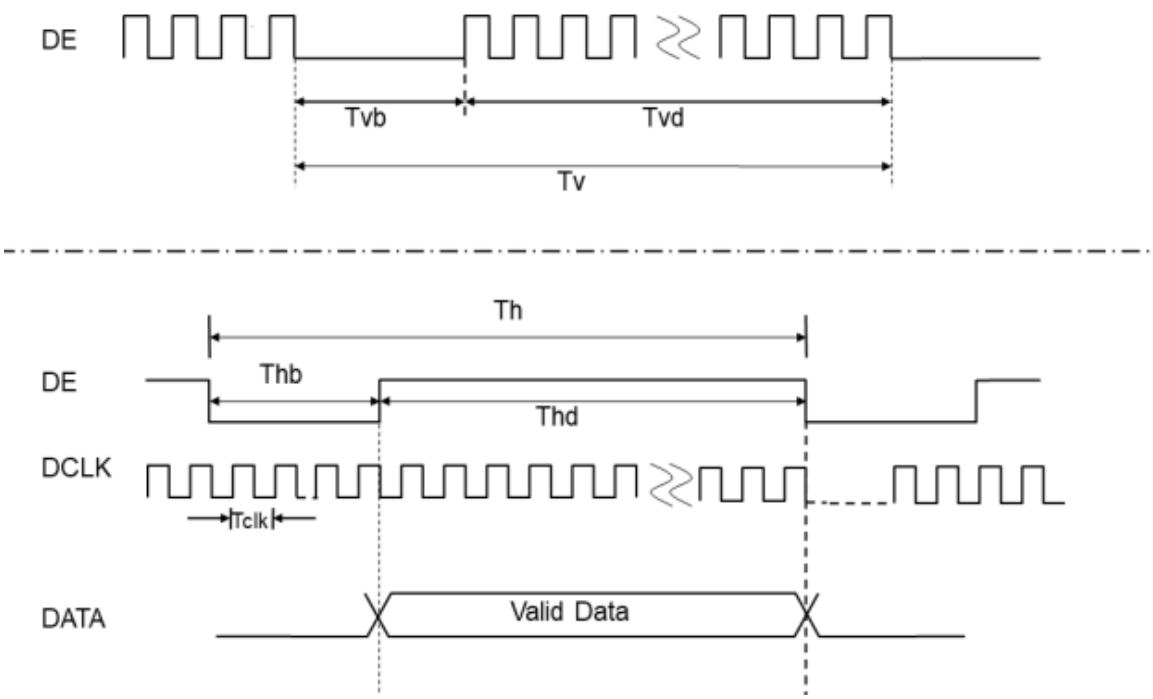

Clock and Data Input Timing Diagram

2.5 LVDS Data Mapping

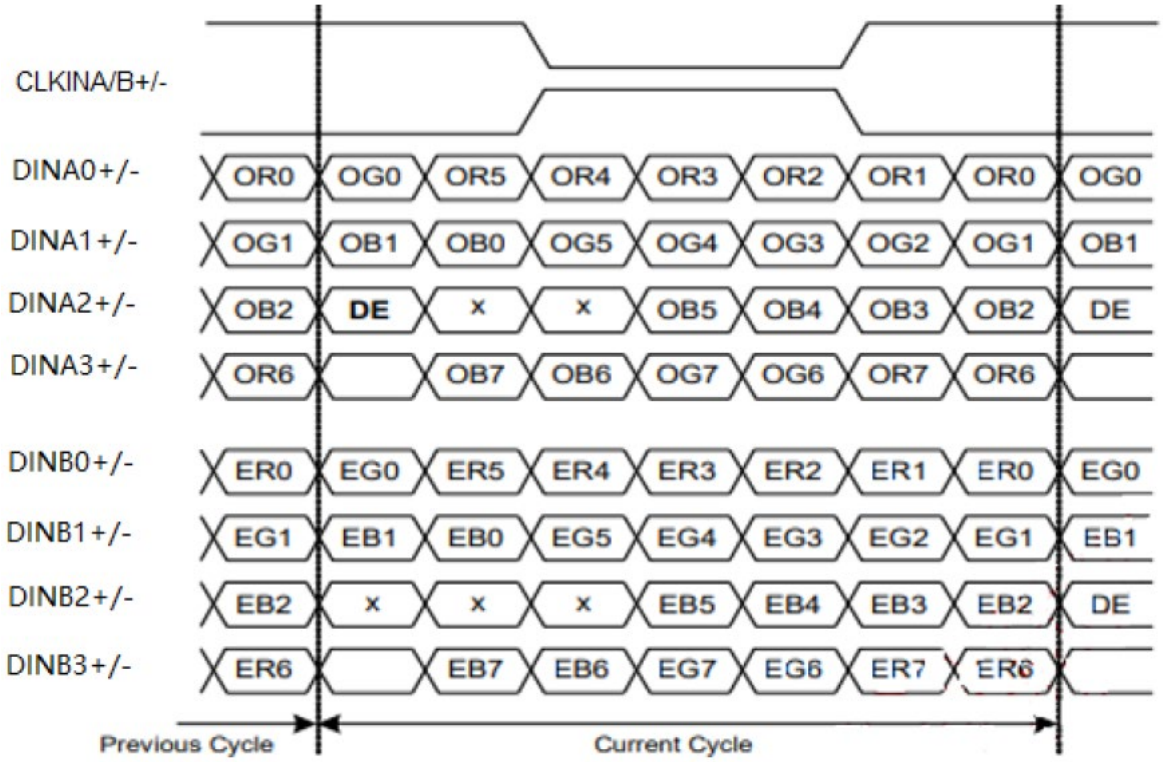

Figure. LVDS data mapping (VESA standard)

2.6 Input/ Output Terminals

CN1 Pin assignment (LCD Interface)

Connector Information	
LCD Module connector	DF14H-30P-1.25H(56)

Table. Connector information

No	Symbol	I/O	Description	Comment
1	DINA0-	I	- LVDS differential data input	
2	DINA0+	I	+ LVDS differential data input	
3	DINA1-	I	- LVDS differential data input	
4	DINA1+	I	+ LVDS differential data input	
5	DINA2-	I	- LVDS differential data input	
6	DINA2+	I	+ LVDS differential data input	
7	GND	P	Ground	
8	CLKINA-	I	- LVDS differential clock input	
9	CLKINA+	I	+ LVDS differential clock input	
10	DINA3-	I	- LVDS differential data input	
11	DINA3+	I	+ LVDS differential data input	
12	DINB0-	I	- LVDS differential data input	
13	DINB0+	I	+ LVDS differential data input	
14	GND	P	Ground	
15	DINB1-	I	- LVDS differential data input	
16	DINB1+	I	+ LVDS differential data input	
17	GND	P	Ground	
18	DINB2-	I	- LVDS differential data input	
19	DINB2+	I	+ LVDS differential data input	
20	CLKINB-	I	- LVDS differential clock input	
21	CLKINB+	I	+ LVDS differential clock input	
22	DINB3-	I	- LVDS differential data input	
23	DINB3+	I	+ LVDS differential data input	
24	GND	P	Ground	
25	GND	P	Ground	
26	GND	P	Ground	
27	GND	P	Ground	
28	VCC	P	Power supply(5V)	
29	VCC	P	Power supply(5V)	
30	VCC	P	Power supply(5V)	

Pin Assignment for LCD Interface

Note1: I/O definition: I---Input, O---Output, P---Power/Ground, N---No connection
Note2: All of the GND pins should be connected to the system ground.

3 Optical Specification

Item		Symbol	Condition	Min.	Typ.	Max.	Unit	Note
Color chromaticity	Red	Rx	θx=0 θy=0 CA-410	0.606	0.636	0.666	-	Test Mode: (2) (3)
		Ry		0.315	0.345	0.375	-	
	Green	Gx		0.250	0.280	0.310	-	
		Gy		0.590	0.620	0.650	-	
	Blue	Bx		0.119	0.149	0.179	-	
		By		0.041	0.071	0.101	-	
	White	Wx		0.251	0.281	0.311	-	
		Wy		0.274	0.304	0.334	-	
Center Luminance of White		Lc	θx=0 θy=0 CA-410	1800	2000	2600	cd/m^2	
Uniform		Lu			80		%	
Contrast Ratio		CR	θx=0 θy=0 Klein K-10	1260:1	1400:1		-	Test Mode: (4)
Color Saturation		NTSC			83		%	
Viewing Angle	Horizontal	θx+	CR ≥ 10		88		Deg	Test Mode: (1)
		θx-			88			
	Vertical	θy+			88			
		θy-			88			

Test Mode：

(1) Definition of Viewing Angle (θx , θy):

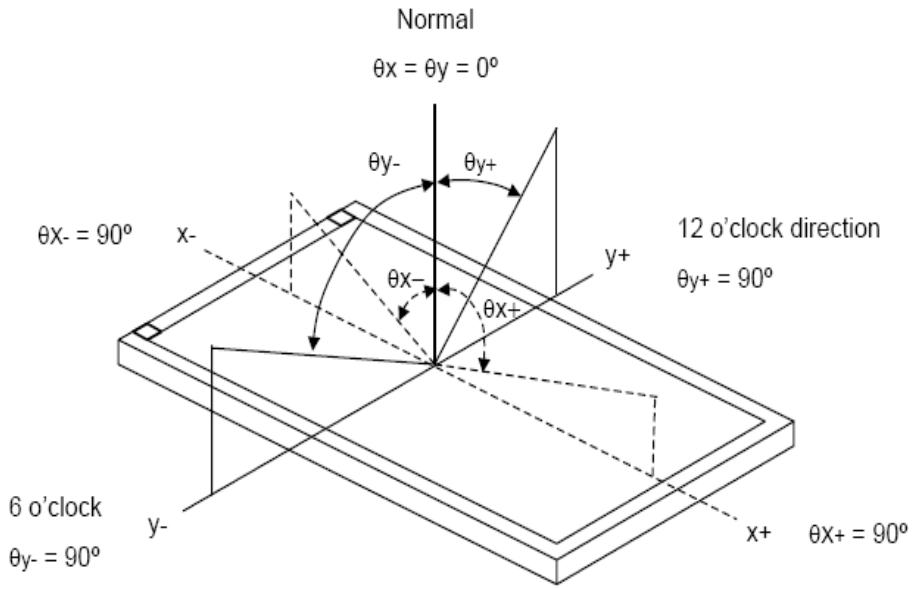

(2) Definition of Test Point:

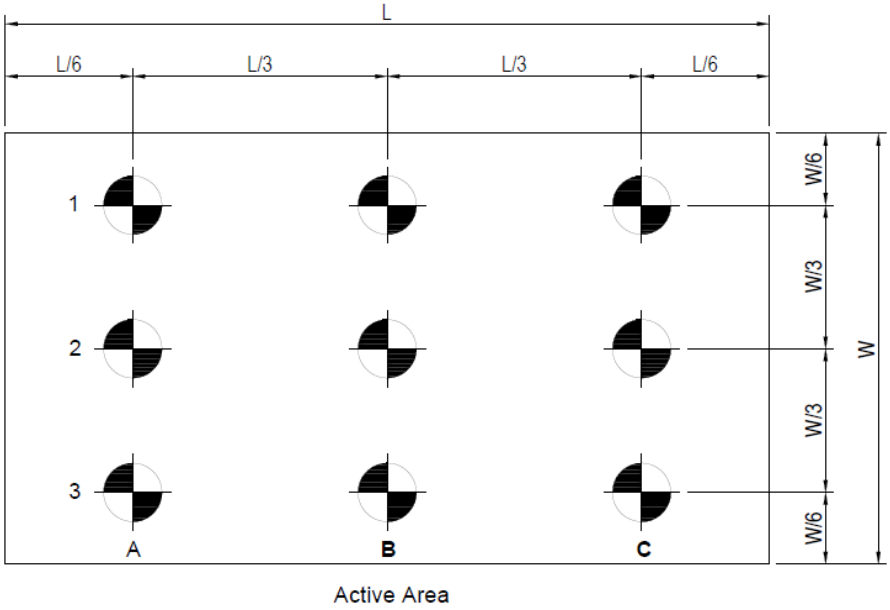

(3) CA-410 Measurement Setup:

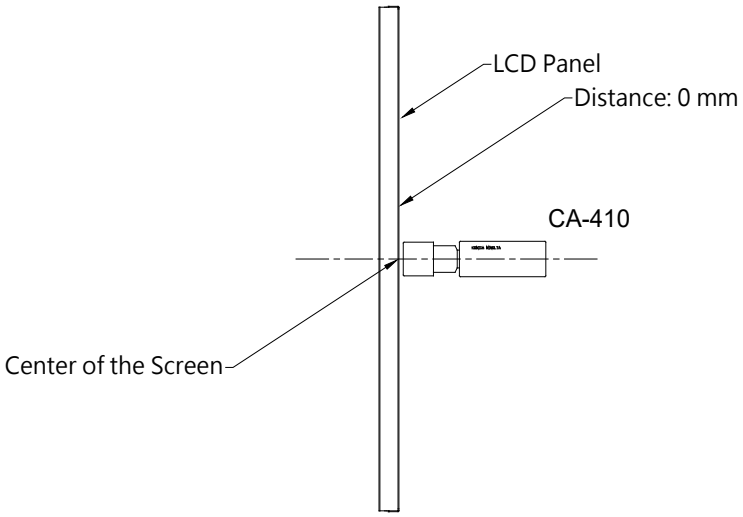

(4) Klein K-10 Measurement Setup:

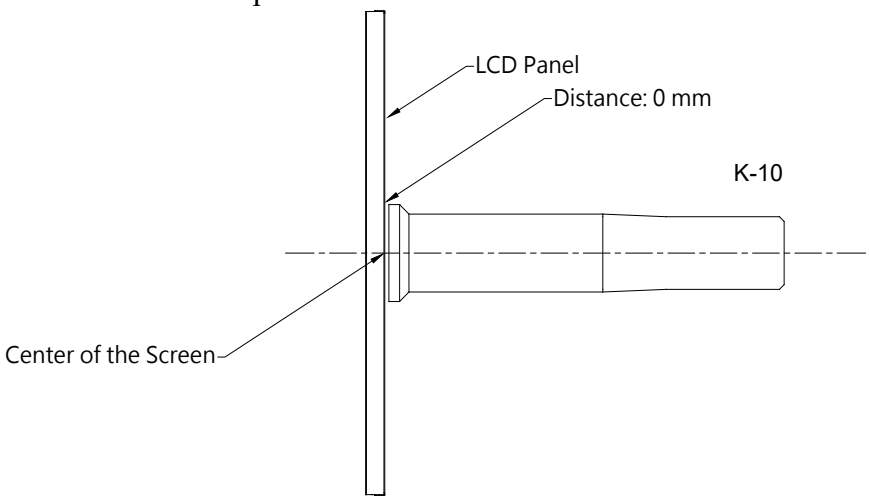

4 LED Driving Board Electrical Characteristics

4.1 LED Driving Board Operating Characteristics

Item	Symbol	Condition	MIN.	TYP.	MAX.	Unit	Remark
Input Voltage	Vin		10.0	12.0	14.0	V	
Input Current (High Brightness)	IinH	Brightness = 100%	3.69	3.06	2.63	A	(1)
Input Power Consumption	Pin	Brightness = 100%	-----	36.9	-----	W	
LED Current (High Brightness)	IoutH	Brightness = 100%	-----	1	-----	A	
Working Frequency	W_Freq	Brightness = 100%	-----	400	-----	KHZ	
Brightness Control	DC mode						
	Vadj	Connection of Voltage	0.2	-----	4.8	V	(2)
	PWM mode						
	PWM	Connect to PWM	0	-----	100	%	(3)
	Freq		-----	200	-----	Hz	(4)
ON/OFF Control	Von	Normal Operation	2	-----	5	V	
	Voff		0	-----	0.8	V	
Output Voltage	Vout	Brightness = 100%	-----	33.78	-----	V	
Efficiency	η	Brightness = 100%	-----	92	-----	%	(5)

Remark:

(1) This data is based on the testing result of practical input voltage, Iin is measured by related Vin. (min, typ, max) .If the voltage is increased, the current will decrease. If the voltage is decrease, the current will increase

(2) Max brightness at Vadj=0.2V. Min brightness at Vadj=4.8V.

(3) Max dimming ratio = 1:100.

(4) Frequency can be adjusted in accordance with demand(120Hz minimum, or lights will be flickering)

(5) $\eta_{max} = V_{out(max)} * I_{outH(max)} / V_{in(max)} * I_{inH(min)}$

$\eta_{min} = V_{out(min)} * I_{outH(min)} / V_{in(min)} * I_{inH(max)}$

4.2 LED Driving Board Connector Pin Assignment

1. Input Connector: J3(JST S9B-PH-SM3-TB or Compatible)

PIN No	Symbol	Description
1	Vin	DC+
2	Vin	DC+
3	Vin	DC+
4	GND	Ground
5	GND	Ground
6	GND	Ground
7	Brightness	Brightness Control
8	Control	ON/OFF Control
9	CL	PWM or DC selection

Note: Pin9 is dimming method control pin, Low → DC dimming, High → PWM dimming.
If pin9 is be used, please NC JP1.

2. Output Connector: J1,J2(JST S2B-EH or Compatible)

PIN NO	Symbol	Description
1	Output	LED High Voltage(+)
2	Output	LED Low Voltage (-)

3. DC or PWM Connector: JP1

PIN NO	Symbol	Description
1	DC	Clsoe pin 1,2 LED driver is DC dimming
2	GND	
		Close pin 2,3 LED driver is PWM dimming
3	PWM	

Note: If you use JP1 to set DC/PWM, please NC the pin9 of J3.

4.3 LED Driving Board Mechanical Characteristics

Dimension: 125 x 50 x 12.5mm

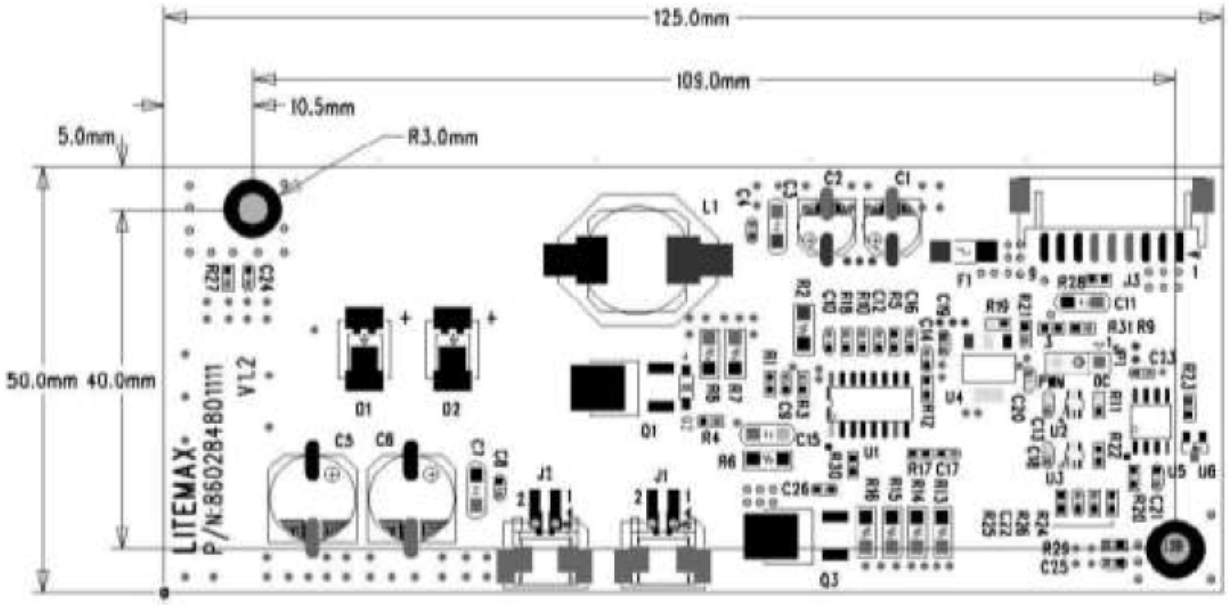

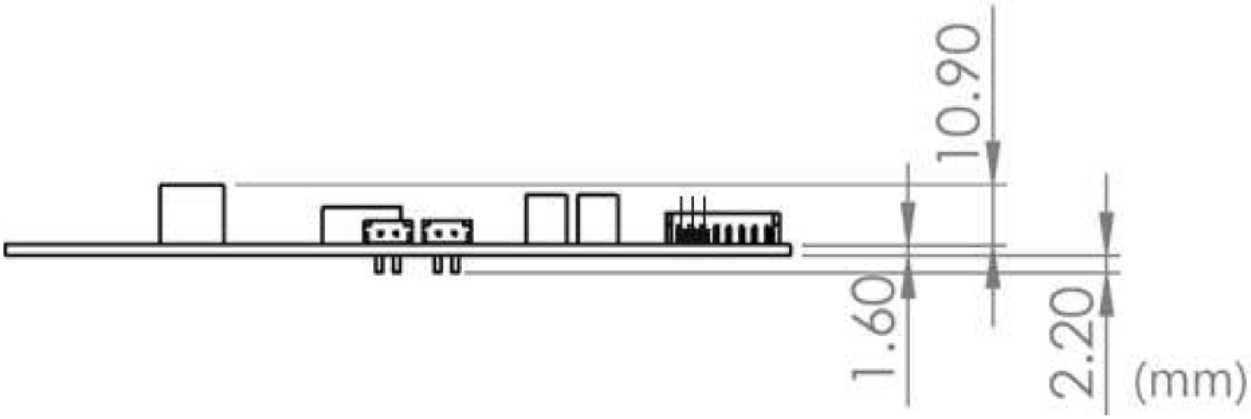

5 Mechanical Drawing

Unit:mm

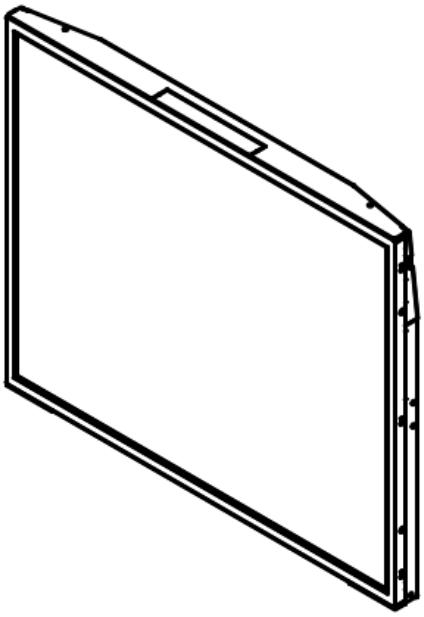

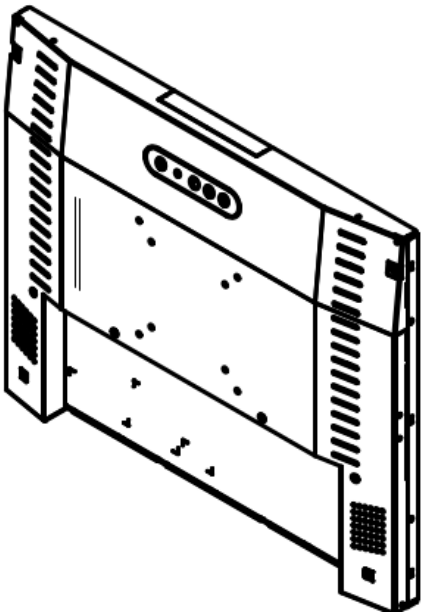

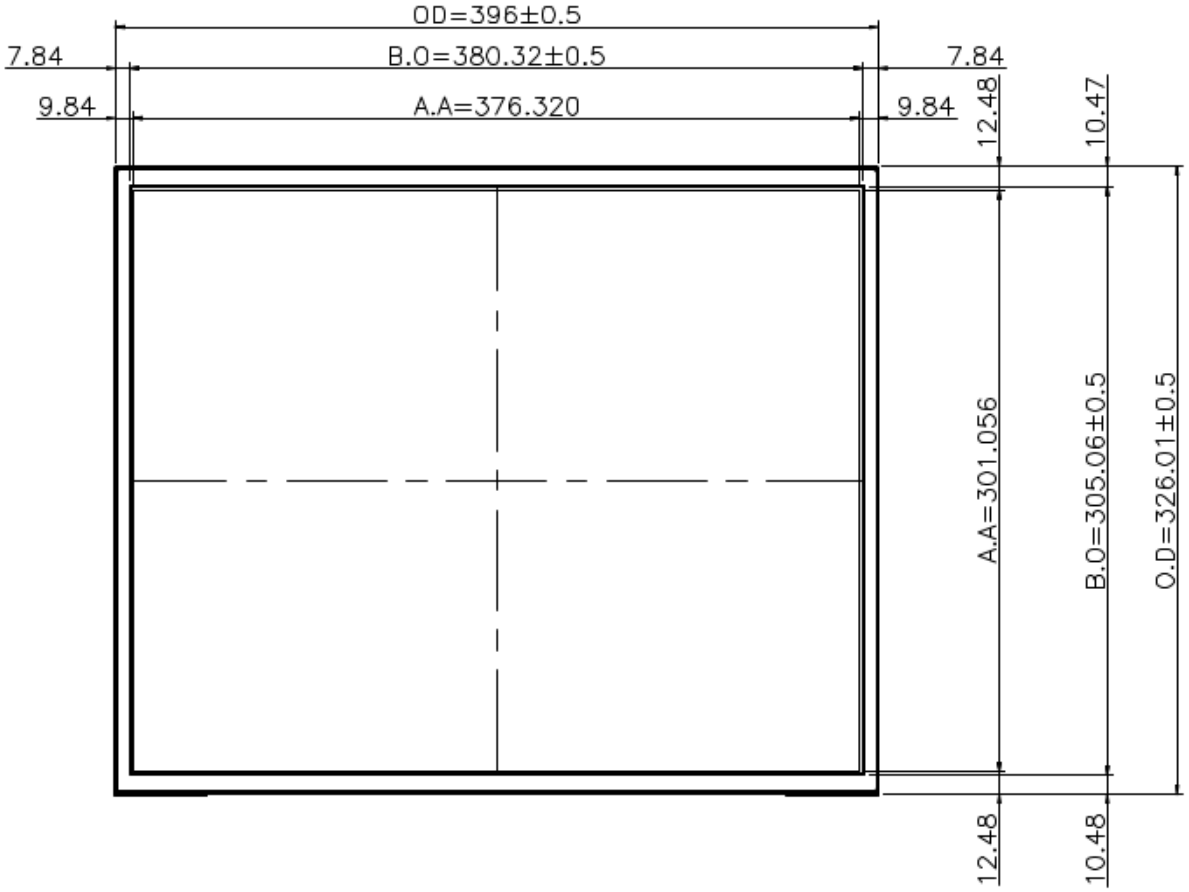

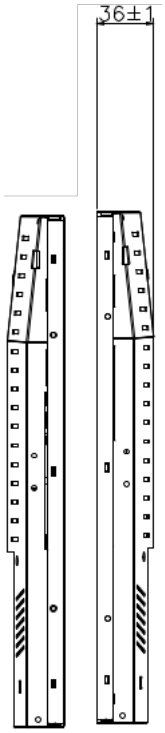
36±1

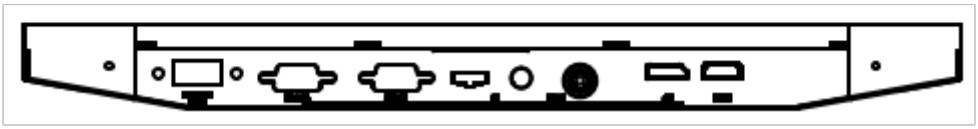

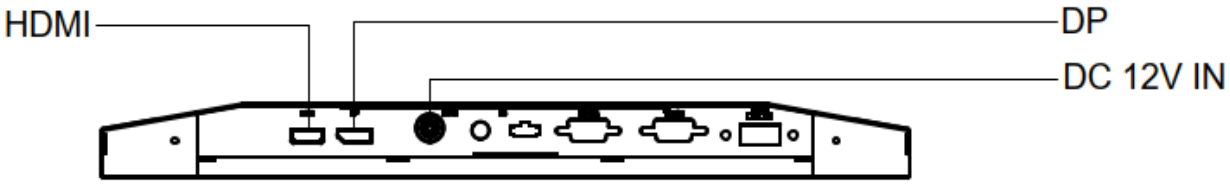
HDMI
DP
DC 12V IN

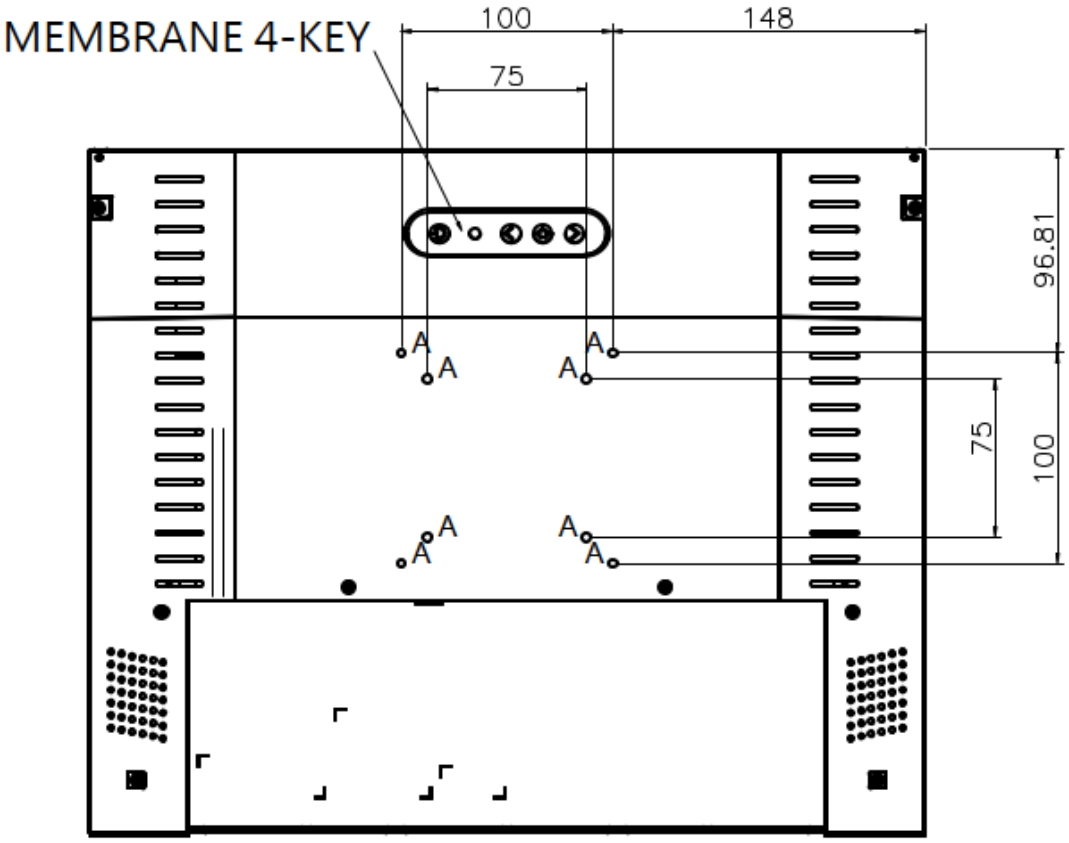

Note：

O.D. : Outline Dimension

B.O. : Bezel Opening

A.A. : LCD Active Area

A：8-M4_USER HOLE_MAX_DEPTH=4mm

6 AD68862HP Board & OSD Functions

We developed this A/D board to support industrial high brightness and commercial applications. This A/D board has many functions. It has a HDMI and Display Port input. Rev.1 is European RoHS compliant.

General Description

- **Max resolution 1920 x 1080 60Hz**
- **One DP 1.2 , supports 1920 x 1080 60Hz**
- **One HDMI 1.4 , supports 1920 x 1080 60Hz**
- **Embedded MCU with ADC port for VR, Light Sensor application. (Optional)**
- **Embedded OSD.**
- **Support panel voltage 3.3/ 5/ 12 V**
- **Support eDP panel.**
- **Support Dual/Single LVDS**
- **Support 2.8W speaker x 2 (Optional)**
- **Size 100mm*72mm**
- **Support output voltage 12V(1A) or 5V(1A)**

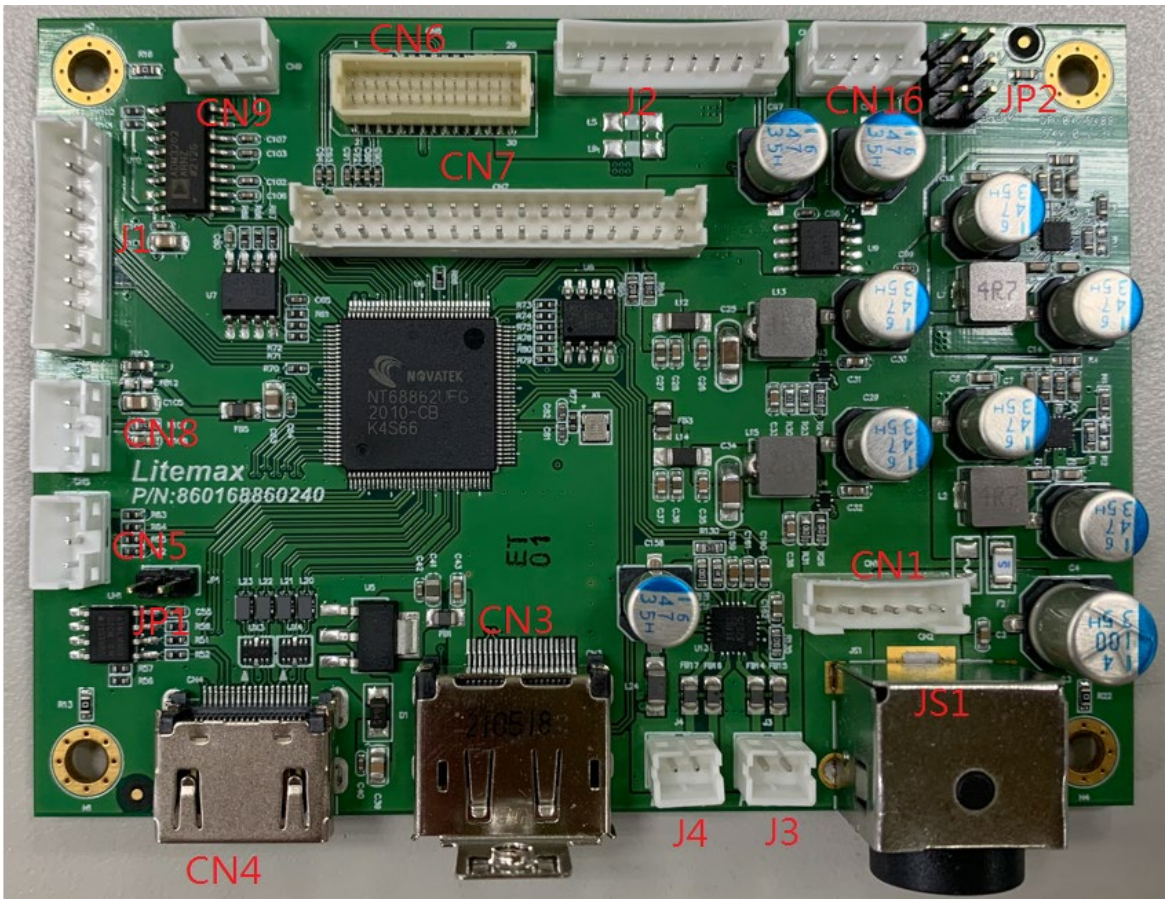

Outline Dimensions

AD68862HP 100 mm x 72mm

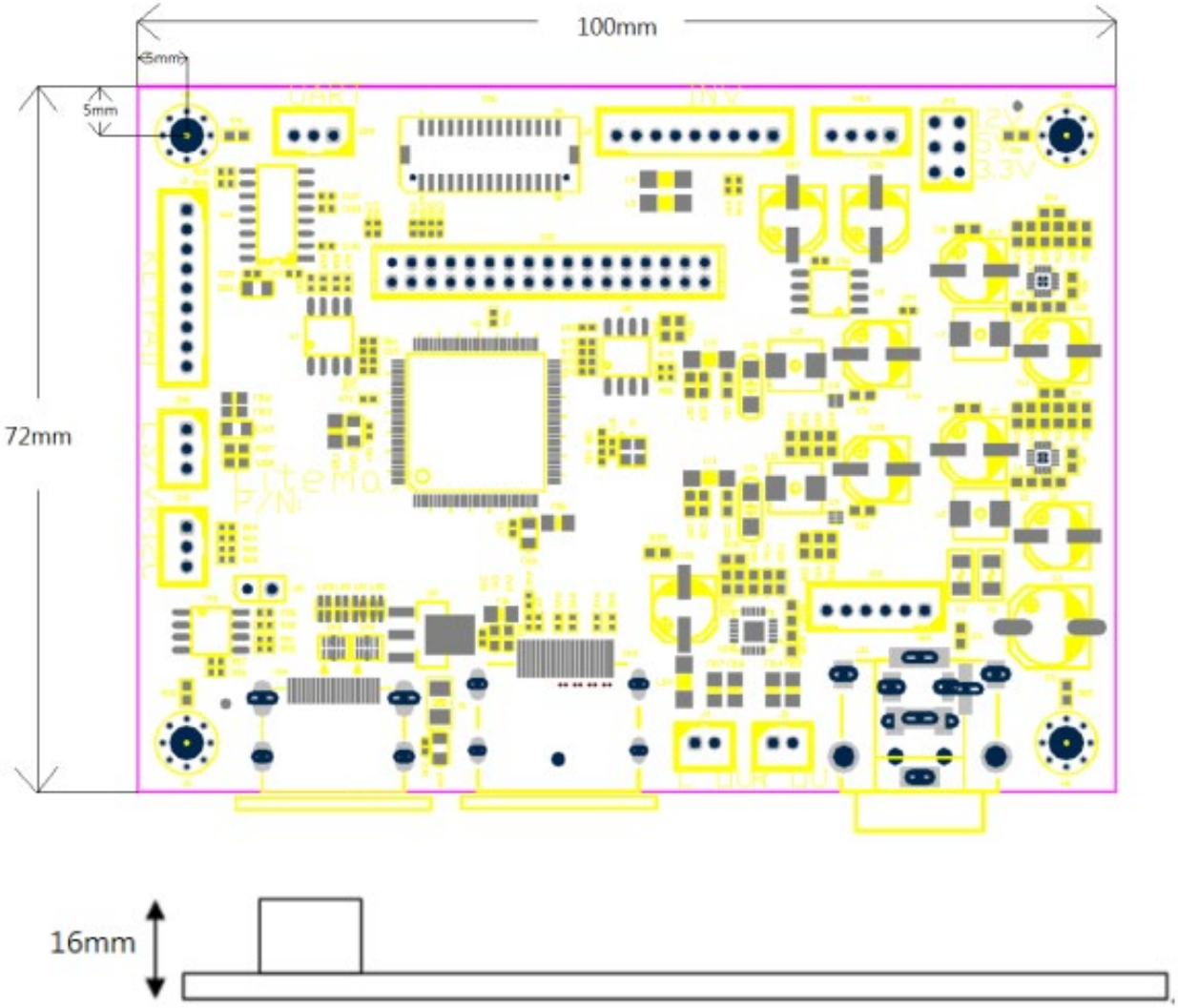

AD68862HP Board Pin Define

CN6: eDP output(Wafer 1.0mm, 15*2P)

Pin	Function	Pin	Function
1	TX0P	16	TXAUX-
2	TX0N	17	TX_HPD
3	TX1P	18	GND
4	TX1N	19	VCC
5	GND	20	VCC
6	GND	21	DIM_EDP
7	NC	22	ON/OFF_EDP
8	NC	23	INVGND
9	GND	24	INVGND
10	GND	25	INVGND
11	NC	26	GND
12	NC	27	12INV
13	GND	28	12INV
14	GND	29	12INV
15	TXAUX+	30	12INV

CN7: LVDS output(Wafer 2.0mm,17x2P)

Pin	Function	Pin	Function
1	RXO0-	18	RXE1+
2	RXO0+	19	RXE2-
3	RXO1-	20	RXE2+
4	RXO1+	21	RXEC-
5	RXO2-	22	RXEC+
6	RXO2+	23	RXE3-
7	RXOC-	24	RXE3+
8	RXOC+	25	NC
9	RXO3-	26	NC
10	RXO3+	27	GND
11	NC	28	GND
12	NC	29	+3.3V
13	GND	30	GND
14	GND	31	VCC
15	RXE0-	32	VCC
16	RXE0+	33	VCC
17	RXE1-	34	VCC

CN3: DP input

Pin	Function	Pin	Function
1	ML_Lane3(n)	11	GND
2	GND	12	ML_Lane0(p)
3	ML_Lane3(p)	13	CONFIG1
4	ML_Lane2(n)	14	CONFIG2
5	GND	15	AUX_CH(p)
6	ML_Lane2(p)	16	GND
7	ML_Lane1(n)	17	AUX_CH(n)
8	GND	18	Hot_Plug
9	ML_Lane1(p)	19	Return
10	ML_Lane0(n)	20	DP_PWR

CN4: HDMI input

Pin	Function	Pin	Function	Pin	Function
1	RX2+	9	RX0-	17	GND
2	GND	10	TMDS Clock+	18	HDMI +5V
3	RX2-	11	HDMI DET	19	HPD
4	RX1+	12	TMDS Clock-		
5	GND	13	NC		
6	RX1-	14	NC		
7	RX0+	15	HDMI_SCL		
8	GND	16	HDMI_SDA		

CN1: Power input (Wafer 2.0mm pitch 6 pin)

Pin	Function	Pin	Function
1	Power Input	4	GND
2	Power Input	5	GND
3	Power Input	6	GND

JS1: Power input (Power Din 4 pin)

Pin	Function	Pin	Function
1	Power Input	3	GND
2	Power Input	4	GND

CN2: Power input (Power Jack 3 pin)

Pin	Function	Pin	Function
1	Power Input	3	GND
2	GND		

CN16: Power output (Wafer 2.0mm pitch 4 pin)

Pin	Function	Pin	Function
1	+5V(1A)	3	+12V(1A)
2	GND	4	GND

J2: Backlight Power and Control (Wafer 2.0mm pitch 9 pin)

Pin	Function	Pin	Function
1	DC/PWM SEL	6	GND
2	Enable	7	12V (Note3)
3	Dimming	8	12V (Note3)
4	GND	9	12V (Note3)
5	GND		

Note3: Pin 7,8,9 are for 12V version only. If you choose 24V version, these 3 pin are NC.

J1: Keypad (Wafer 2.0mm pitch 9 pin)

Pin	Function	Pin	Function
1	POWER KEY	6	MENU KEY
2	GREEN LED	7	NC
3	RED LED	8	GND
4	DOWN KEY	9	NC
5	UP KEY		

CN8: Light sensor (Wafer 2.0mm pitch 3 pin)

Pin	Function	Pin	Function
1	3.3V	3	GND
2	Sensor Out		

JP2: Panel power selection (2.54mm pitch 2x3 jump)

Pin	Function	Pin	Function
1-2 close	3.3V	5-6 close	12V
3-4 close	5V		

CN9: UART (Wafer 2.0mm pitch 3 pin)

Pin	Function	Pin	Function
1	TX	3	GND
2	RX		

CN5: I2C (Wafer 2.0mm pitch 3 pin)

Pin	Function	Pin	Function
1	SDA	3	GND
2	SCL		

J3: Audio out R (Wafer 2.0mm pitch 2 pin)(2.8W 4ΩLoad)

Pin	Function	Pin	Function
1	ROUTP	2	ROUTN

J4: Audio out L (Wafer 2.0mm pitch 2 pin) (2.8W 4ΩLoad)

Pin	Function	Pin	Function
1	LOUTP	2	LOUTN

6.1 OSD Function

MEMBRANE CONTROL BUTTOM

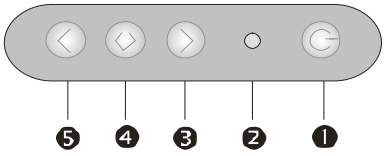

❶ **POWER SWITCH:** Pushing the power switch will turn the monitor on. Pushing it again to turn the monitor off.

❷ **Power LED:** Power ON-Green / Power OFF-No.

❸ **Up Key >:** Increase item number or value of the selected item.

❹ **Menu Key:** Enter to the OSD adjustment menu. It also used for go back to previous menu for sub-menu, and the change data don't save to memory.

❺ **Down Key <:** Decrease item number or item value when OSD is on.

Screen Adjustment Operation Procedure

1. **Entering the screen adjustment**
   The setting switches are normally at stand-by. Push the **Menu Key** once to display the main menu of the screen adjustment. The adjustable items will be displayed in the main menu.
2. **Entering the settings**
   Use the **Down Key <** and **Up Key >** buttons to select the desired setting icon and push the SELECT button to enter sub-menu.
3. **Change the settings**
   After the sub-menu appears, use the **Down Key <** and **Up Key >** buttons to change the setting values.
4. **Save**
   After finishing the adjustment, push the SELECT button to memorize the setting.
5. **Return & Exit the main menu**
   Exit the screen adjustment; push the "MENU" button. When no operation is done around 10 sec (default OSD timeout), it goes back to the stand-by mode and no more switching is accepted except MENU to restart the setting.

6.2 OSD Menu

Here are some instructions for you to use the OSD (On Screen Display). By pressing the “menu”, you will see the below picture.
Timing shows resolution and V-frequency of the panel. This 2 information is not changeable by user.

There are 6 sub menus within the OSD user interface:
Brightness, **Signal Select**, **Sound**, **Color**, **Tools**, and **Exit**.

Brightness

When you press the “menu” button, you enter the “Brightness” sub directory. In this directory, you will see 6 selections: **Brightness Mode**, **OSD Brightness**, **Contrast**, **Sharpness**, **Auto Tune**, **Exit**.

Brightness Mode：
press “menu” once, you can go into the Brightness Mode.

VR: (OPTION)
press this Icon to activate the VR control of brightness.

Ambient light sensor: (OPTION)
press this Icon, must to accompany with Litemax ambient light sensor to auto dimming.

OSD Brightness：

Press the “menu” once, to adjust the brightness. Press “left” to dim down the brightness to “0”, press “right” to increase the brightness to “100”

Contrast：

Press “Menu” once, you can adjust the contrast from“0” to “100” by pressing the “Left” and “Right”.

Sharpness：

Press “Menu” once, you can adjust the Sharpness from“0” to “4” by pressing the “Left” and “Right”.

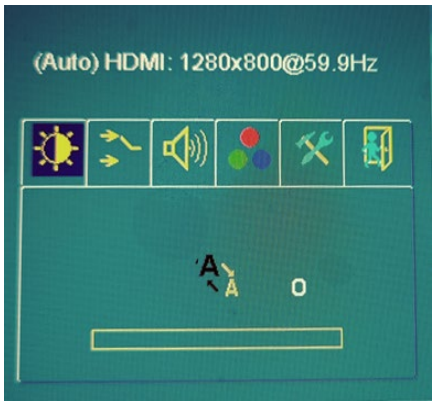

Auto Tune： (VGA only)

Press “Menu” once, you can activate the Auto Tune.

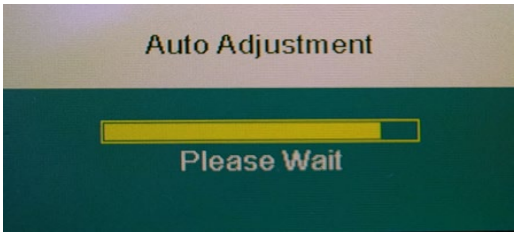

Exit: back to the beginning menu.

Input Signal: (default auto detect)

AUTO: auto detect

HDMI: HDMI input

DP: DisplayPort input

Exit: back to the beginning menu.

Audio:

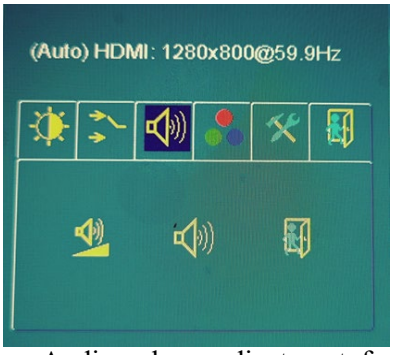

Audio Volume: Audio volume adjustment, from“0” to “100”.

UnMute/Mute: You can mute the speaker by pressing this option.

Exit: back to the beginning menu.

Color:

Auto Color (VGA only)：

By navigating over to the “Auto Color” option, optimal color performance is invoked.

Color Tempture_6500K: Warm color scheme.

Color Tempture_9300K: Cold color scheme.

Color Temperature User Define: Default is 100 for “R”, “G”, and “B”. Range is“0” to “255”.

Exit: back to the beginning menu.

Other Setting:

HPos: You can shift the screen horizontally using this function.

VPos: You can shift the screen vertically using this function.

Rotation: You can rotate the screen to 0° (No)、270° (Yes).

Load Default: You can load the default data using this function.

Exit: back to the beginning menu.

< **Hot Key** >

Left click to display brightness adjustment.

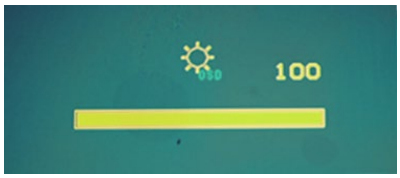

Right click to display Input Source Menu.

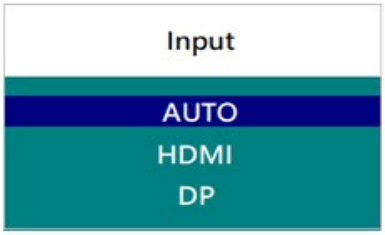

<Others>

Signal Information will be displayed after powering on or switching the signal.

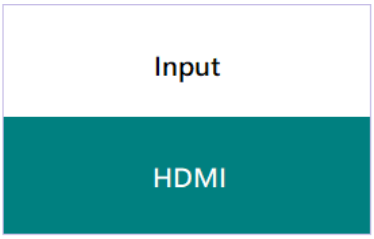

(Signal Information)

NO VIDEO INPUT will be displayed when there is no signal input.

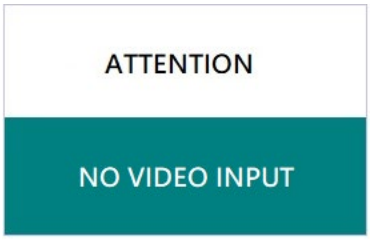

(No Video Input)

CHECK CABLE CONNECTION will be displayed when the signal cable is not connected.

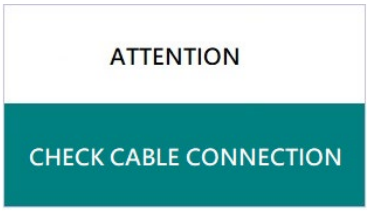

(Check Cable Connection)

7 Precautions

7.1 Handling and Mounting Precautions

(1) The module should be assembled into the system firmly by using every mounting hole. Do not apply rough force such as bending or twisting to the LCD during assembly.
(2) You should consider the mounting structure so that uneven force (ex. Twisted stress, Concentrated stress) is not applied to the module. And the case on which a module is mounted should have sufficient strength so that external force is not transmitted directly to the LCD module.
(3) While assembling or installing LCD modules, it can only be in the clean area. The dust and oil may cause electrical short or damage the polarizer.
(4) Use fingerstalls or soft gloves in order to keep display clean during the incoming inspection and assembly process.
(5) Do not press or scratch the surface harder than a HB pencil lead on the panel because the polarizer is very soft and easily be scratched.
(6) Please attach the surface transparent protection film to the surface in order to protect the polarizer. Transparent protection film should have sufficient strength in order to the resist external force.
(7) When the transparent protection film is peeled off, static electricity is generated between the film and polarizer. This should be peeled off slowly and carefully by people who are electrically grounded and with well ion-blown equipment or in such a condition, etc.
(8) If the surface of the polarizer is dirty, please clean it by some absorbent cotton or soft cloth. Do not use Ketone type materials (ex. Acetone), Ethyl alcohol, Toluene, Ethyl acid or Methyl chloride. It might permanently damage the polarizer due to chemical reaction.
(9) Wipe off water droplets or oil immediately. Staining and discoloration may occur if they left on panel for a long time.
(10) If the liquid crystal material leaks from the panel, it should be kept away from the eyes or mouth. In case of contacting with hands, legs or clothes, it must be washed away thoroughly with soap.
(11) Protect the LCD module from static electricity, it may cause damage to the C-MOS Gate Array IC.
(12) Do not disassemble the module.
(13) Do not pull or fold the lamp wire.
(14) Pins of I/F connector should not be touched directly with bare hands.

7.2 Storage Precautions

(1) High temperature or humidity may reduce the performance of LCD module. Please store LCD module within the specified storage conditions.
(2) If possible store them in a dark place. Do not expose the module to sunlight or fluorescent light. Keep the temperature between 5°C and 35°C at normal humidity.
(3) It is dangerous that moisture come into or contacted the LCD module, because the moisture may damage LCD module when it is operating.
(4) The polarizer surface should not come in contact with any other object. It is recommended that they be stored in the container in which they were shipped.

7.3 Operation Precautions

(1) Do not pull the I/F connector in or out while the LCD module is operating.
(2) Always follow the correct power on/off sequence when LCD module is connecting and operating. This can prevent the CMOS LSI chips from damage during latch-up.
(3) Response time depends on the temperature. (In lower temperature, it becomes longer.)
(4) Brightness depends on the temperature. (In lower temperature, it becomes lower.)
(5) Be careful for condensation at sudden temperature change. Condensation makes damage to polarizer or electrical contacted parts. And after fading condensation, smear or spot will occur.
(6) Module has high frequency circuits. Sufficient suppression to the electromagnetic interference shall be done by system manufacturers. Grounding and shielding methods are very important to minimize the interference.
(7) Please do not give any mechanical and/or acoustical impact to module. Otherwise, module can't be operated its full characteristics perfectly.
(8) Since a module is composed of electronic circuits, it is not strong to electrostatic discharge. Make certain that treatment persons are connected to ground through wrist band etc. And don't touch interface pin directly.
(9) Do not display the fixed pattern for a long time because it may cause image sticking.
(10) In order to prevent image sticking, periodical power-off or screen save is needed after fixed pattern long time display.
(11) Black image or moving image is strongly recommended as a screen save.
(12) Static information display recommended to use with moving image. Cycling display between 10 minutes' information (static) display and 10 seconds' moving image.
(13) Background and character (image) color change is recommended. Use different colors for background and character, respectively. And change colors themselves periodically.
(14) LCD system is required to place in well-ventilated environment. Adapting active cooling system is highly recommended.
(15) Product reliability and functions are only guaranteed when the product is used under right operation usages.
(16) If product will be used in extreme conditions, such as high temperature/ humidity, shock and vibration it is strongly recommended to contact Litemax for filed application engineering advice. Otherwise, its reliability and function may not be guaranteed. Extreme conditions are commonly found at airports, transit stations, taxi-top, in vehicle and controlling systems.

8 Disclaimer

All information in this document are subject to change, please constant LiteMax for any new design.